Nebraska Department of Transportation

NEBRASKA

Good Life. Great Journey.

DEPARTMENT OF TRANSPORTATION

Environmental Section
Planning and Project Development

AVIAN PROTECTION PLAN

TABLE OF CONTENTS

I. PREFACE

II. REGULATIONS

III. GLOSSARY

IV. ABBREVIATIONS

V. POLICY

VI. SCHEDULING / PLANNING

VII. PROJECT CONSTRUCTION PROCEDURES

VIII. AVIAN SURVEY

IX. ACTIVE NEST PROCEDURES

X. OTHER SPECIAL ACTIVITIES

XI. AVIAN REPORTING SYSTEM

XII. RECORD KEEPING

XIII. TRAINING

XIV. KEY RESOURCES

XV. APPENDIX

I. PREFACE

Nebraska Department of Transportation (NDOT) holds a responsibility to the traveling public to provide safe, reliable roads to traverse the state of Nebraska. Fulfilling this commitment requires construction throughout the year. At times, construction occurs during the nesting season or the migration times of migratory birds and/or threatened or endangered species of birds. For the past several years, NDOT has worked to reduce avian mortality through changes in project scheduling to avoid avian conflicts, increased migratory bird surveys, and changes in project construction timelines. These changes have resulted in the development of an Avian Protection Plan (APP) by NDOT. It is NDOT's goal to illustrate this ongoing procedure designed to protect and conserve avian populations and to reduce conflicts between construction of roads projects and the laws governing migratory birds.

II.REGULATIONS

Three federal laws and one state law currently protect migratory birds in the United States. Failure to comply with these laws can result in civil and criminal penalties including fines and/or imprisonment.

Migratory Bird Treaty Act of 1918 (MBTA) (16 U.S.C. 703-712):
Migratory Bird Treaty Act (MBTA) of 1918, as amended covers migratory bird species protected under four international treaties between the U.S. and Canada, Japan, Mexico, and Russia.

The MBTA protects all birds native to North America, with the exception of non- migratory upland game birds (e.g. quail, grouse, pheasant, turkey, etc.) however, these species are protected by state game laws. The following four species are exempt from protection under MBTA: house sparrow, European starling, feral rock pigeon, and Eurasian collared doves. These species were introduced here by man and are not native to North America The MBTA states that it is "unlawful to pursue, hunt, take, capture, kill, possess, sell, purchase, barter, import, export, or transport any migratory bird, or any part, nest, or egg or any such bird." The MBTA currently protects over 1000 species of birds that occur in the U.S. for a full list of all birds protected and not protected under MBTA refer to: 50 CFR 10.13.

Threatened and Endangered Species Act of 1973 (ESA) (16 U.S.C. 1531-1544):
The ESA provides protection to our nation's native plants and animals that are in danger of becoming extinct and to conserve their habitats. The ESA makes it unlawful to import, export, take (kill, (including harm or harass), transport, sell, purchase, or receive in interstate or foreign commerce any species listed as threatened or endangered. For a full list of species protected under ESA refer to: 50 CFR 17.11 and 17.12

Bald and Gold Eagle Protection Act of 1940 (BGEPA) (16 U.S.C. 668-668d): Bald and golden eagles, their parts, active and inactive nests and eggs are afforded additional protection under the Bald and Golden Eagle Protection Act. Additionally, under the BGEPA, it is unlawful to "disturb" an eagle without the proper permit.

Nebraska Nongame and Endangered Species Conservation Act of 1975 (Nebraska Revised Statutes §37-801 et seq.): The state shall conserve non-game species, and species determined to be endangered or threatened, for human enjoyment, for scientific purposes, and to ensure their continued existence as a part of our natural world.

III. GLOSSARY- *These definitions have been developed using several resources and may not coincide with established language in the Standard Specifications for Highway Construction.*

Active Nest: A nest with an adult and eggs or young present. Nests are *active* primarily during the primary breeding season (April 1st – September 1st). Raptors may nest earlier, and swallows may nest later than some of the other migratory bird species that move into Nebraska during the breeding season.

Awarded: A construction project that has been let will then be granted and assigned to the construction contractor with the lowest bid. Awarding contracts typically takes place 10 days to 2 weeks after letting.

Construction Start Date (or Start Date): The date the construction contractor or NDOT determines the project will commence construction.

Disturb: To agitate or bother a bald or golden eagle to a degree that causes, or is likely to cause, based on the best scientific information available, 1) injury to an eagle, 2) a decrease in its productivity, by substantially interfering with normal breeding, feeding, or sheltering behavior, or 3) nest abandonment, by substantially interfering with normal breeding, feeding, or sheltering behavior.

Fledge: Young have left the nest and are no longer dependent on it for shelter or for feeding from the adult(s).

General Clearing and Grubbing: Removal of all living or dead vegetation, including trees and trash, from within the limits of construction and the lateral obstacle clearance zone. This includes borrow pits and channel changes unless designated to remain.

Inactive Nest: A nest that does not contain eggs or young. Inactive nests may be complete or partially complete, and may be removed at any time throughout the year as long as they do not contain eggs or young and as long as possession of the nest does not occur.
http://www.fws.gov/migratorybirds/mbpermits/PoliciesHandbooks/MBPM-2.nest.PDF

Letting: Upcoming construction projects are "let" out for bids to construction contractors. Monthly scheduling meetings determine which projects will be let for bids the following month.

Migration: A seasonal or periodic movement of animals in response to changes in climate or food availability, or to ensure reproduction.

Migratory Bird: Any bird which migrates during the year, such as, but not limited to: hawks, American robins, swallows, mourning doves, American tree sparrow, and whooping crane. Current listing of migratory birds is found in 50 CFR Part 10.13 at
https://www.fws.gov/birds/management/managed-species/migratory-bird-treaty-act-protected-species.php

NDOT Environmental Section: Environmental Section of the NDOT Project Development Division.

Notice to Proceed: Notice given by NDOT to the contractor that (s)he may proceed with construction on the project.

Raptor: Bird of prey with sharp hooked bill and sharp talons used for killing and eating prey; includes members of the orders Falconiformes and Strigiformes, and member of the family Cathartidae (i.e. hawks, eagles, owls, falcons, osprey, and vultures).

Take: In the MBTA, take is defined as: "to pursue, hunt, shoot, wound, kill, trap, capture, or collect, or attempt to pursue, hunt, shoot, wound, kill, trap, capture, or collect."

The ESA definition of take includes: "harm, harass, pursue, hunt, shoot, wound, kill, trap, capture or collect or attempt to engage in any such conduct." [ESA §3(19)] Harm is further defined to include "significant habitat modification or degradation that results in death or injury to listed species by significantly impairing behavioral patterns such as breeding, feeding, or sheltering." Harass is defined as "actions that create the likelihood of injury to listed species to such an extent as to significantly disrupt normal behavior patterns which include, but are not limited to breeding, feeding or sheltering." [50 CFR §17.3]

The BGEPA defines take to include: "Pursue, shoot, shoot at, poison, wound, kill, capture, trap, collect, or molest or disturb."

Threatened and Endangered Species: Species of animals or plants that are threatened with extinction that are listed under federal law 50 CFR Part 17 and/or protected by state law Neb. Rev. Stat. §37.

A *threatened* species is any species which is likely to become an endangered species within the foreseeable future throughout all or a significant portion of its range. [ESA §3(20)] Nebraska defines a threatened species as any species of wild fauna or flora which appears likely to become endangered, either by determination of the commission or by criteria provided by the Endangered Species Act. [Neb. Rev. Stat. § 37-801 -11]

An *endangered* species is any species is any species which is in danger of extinction throughout all or a significant portion of its range. [ESA §3(6)] Nebraska defines an endangered species as any species of wildlife or wild plants whose continued existence as a viable component of the wild fauna or flora of the state is determined to be in jeopardy or any species of wildlife or wild plants which meets the criteria of the Endangered Species Act. [Neb. Rev. Stat. § 37-801 -11]

Working Days: The length of the construction contract is determined by how many actual working days are designated for the completion of the project. Often seasonal and weather-related delays are accounted for. Conflicts with migratory birds are not accounted for, nor compensated for, and the contractor must plan accordingly to shift his work to another area of the project to avoid migratory bird conflicts.

IV. ABBREVIATIONS

APP: Avian Protection Plan
BCC: Birds of Conservation Concern, as defined by the US. Fish and Wildlife Service
BGEPA: Bald and Golden Eagle Protection Act of 1940
ESA: Endangered Species Act of 1973
FWS: United States Fish and Wildlife Service
OLE: United States Fish and Wildlife Service, Office of Law Enforcement
LOC: Limits of Construction
MBTA: Migratory Bird Treaty Act of 1918
NDOT: Nebraska Department of Transportation
NEFO: United States Fish and Wildlife Service Nebraska Ecological Services Field Office
NESCA: Nebraska Nongame and Endangered Species Conservation Act
NNLP: Nebraska Natural Legacy Plan (Tier 1 and Tier 2 At-Risk Species, Lists for Birds and associated habitats in Nebraska)
NGPC: Nebraska Game and Parks Commission
PIF: Partners in Flight, birds of concern as defined by the national Watch List (https://digitalmedia.fws.gov/digital/collection/document/id/275), and the 3 Physiographic Regions (area plans) that cover Nebraska: Dissected Till Plains, Central Mixed grass Prairie, and Central Shortgrass Prairie (http://www.partnersinflight.org/resources/)
PM: Construction Project Manager, Nebraska Department of Transportation
ROW: Right of Way
T/E: Threatened and/or Endangered species, state or federally listed
WS: United States Department of Agriculture – Animal and Plant Health Inspection Service – Wildlife Services

V. POLICY

NDOT personnel shall observe and comply with all applicable Federal and State laws, regulations and Executive Orders regarding avian protection, and the NDOT Avian Protection Plan (APP), while constructing and maintaining safe, reliable roadways for the traveling public.

To fulfill this commitment NDOT will:

- Implement a comprehensive APP.
- Ensure compliance with applicable laws, regulations, permits, and APP procedures.
- Review future road construction projects and determine potential avian conflicts.
- Attempt to schedule projects' construction activities to avoid conflicts with nesting migratory birds.
- Document bird surveys, the results of those surveys and any active nests.
- Take appropriate measures to prevent migratory bird nesting activities.
- Provide training to improve employee and contractor knowledge of the APP and avian protection laws.

NDOT's environmental stewardship will be enhanced, detrimental effects on migratory birds will be reduced, and regulatory compliance will be achieved with the implementation of this

policy. NDOT employs environmental stewardship in every-day activities by utilizing native vegetation, restoring historic water flows and creating wildlife habitat on wetland mitigation banks and roadside environments.

FAST Act: The Fixing America's Surface Transportation Act (Pub. L. No. 114-94) was enacted December 4, 2015 to provide long-term funding certainty for surface transportation infrastructure planning and investment. Section 1439 of the FAST Act temporarily authorizes, under the Migratory Bird Treaty Act (MBTA; 16 U.S.C. 703 *et seq.*), the take of nesting swallows between April 1 and August 31 for bridge construction projects that are: (1) eligible for funding under title 23, United States Code, and (2) have any component condition rated 3 or less as defined by the National Bridge Inventory General Condition Guidance.

The provision to take nesting swallows requires USFWS notification before (30 days) and after (60 days) take occurs, and does not allow the take of other migratory bird species. Additionally, measures to minimize impacts (such as those outlined in this APP) may be required before any take occurs. It is in the contractor's best interest to coordinate early with NDOT to determine if/when provision 1439 can be applied to their project. Full details on FHWA's Interim Guidance on Implementing FAST ACT Section 1439 can be found here: https://www.environment.fhwa.dot.gov/ecosystems/wildlife_guidance_sect1439.asp

VI.SCHEDULING / PLANNING

Regularly scheduled construction projects are reviewed at least one year prior to the project letting date. In the instance of priority projects, they are reviewed when presented to the Environmental Section. Projects involving, but not limited to, grading, bridges or culverts are reviewed with the project designer to examine project details, construction phasing and potential conflicts with migratory birds, bald or golden eagles, or threatened/endangered species. These potential conflicts are noted in NDOT's Clarity project tracking system. Clarity is used to run a monthly project letting report for use in the monthly Scheduling meetings. Potential conflicts, and recommendations to avoid these conflicts, are listed with the associated construction project. This assists NDOT in planning and scheduling projects to have minimal migratory bird conflicts, by allowing them to try to move the projects within the upcoming year so that projects with large areas of tree or other vegetation removal, or major bridge reconstruction, for example, are scheduled to occur outside Nebraska's primary nesting season. All projects are reviewed within one year of scheduled letting. NDOT, Environmental Section coordinates with the NEFO during the planning of projects with potential to impact to endangered or threatened species, migratory birds, or bald or golden eagles, whenever possible. If it is determined, in advance of the project letting, that there is potential for migratory bird impacts, NDOT may work with FWS to possibly obtain a special purpose permit for the relocation, removal or take of migratory birds.

NDOT reviews upcoming projects with bridge and/or culvert work to determine the need and timing for placement of netting, or other potential methods, i.e. dispersal, for deterring bird nesting/area use on the structures. If the project will be awarded between August 1 and March 1, the contractor should apply netting on the project if warranted. If the project will be awarded between March 1 and July 31, NDOT may contract with WS, another contractor,

or request NDOT personnel to apply netting to culverts/bridges on the project. Projects with netting applied prior to project letting will be turned over to the contractor at project start. It will then become the contractor's responsibility to monitor and maintain the netting.

It is the responsibility of the contractor awarded the bid for a project to provide NDOT Environmental Section an action plan detailing how the contractor will comply with MBTA. NDOT has issued a Special Prosecution and Progress directive to assist the contractor in his planning. NDOT has also developed Bird Exclusion Netting guidelines for excluding nesting birds from bridges and culverts. Both of these documents are attached in the Appendix.

VII. PROJECT CONSTRUCTION PROCEDURES

During the project's construction within the primary nesting season April 1 – September 1, if unforeseen work on migratory bird habitat is to take place, a nesting survey shall be completed prior to starting work. The contractor will contact the PM, who will contact the Environmental Section to schedule a survey. Surveys will be conducted through September 1 for work that may require general clearing or grubbing, large tree removal, or work that may impact or disturb eagles or threatened or endangered species. Surveys will be conducted through September 30 for bridge/culvert work. Surveys conducted from April 1 through September 1 will be accomplished by qualified biologists or WS.

Efforts will be made to conduct surveys in the morning to capture the most bird breeding activity. During the heat of the day, birds may be less active; therefore, breeding behaviors may not be apparent. NDOT understands the time constraints placed on construction project activity; however, nesting surveys might not be as accurate during adverse weather conditions. Periods of precipitation or high winds should be avoided as birds would likely avoid detection.

Trees, brush and surrounding vegetation that are surveyed during the primary nesting season, and found to be devoid of active nests, will be removed within three (3) days. Culverts, bridges and surrounding vegetation that are surveyed during the primary nesting season and found to be devoid of active nests, will be protected, such as with netting, within three (3) days. Vegetation surrounding the bridge/culvert will either be removed, or otherwise made unattractive to potential nesting birds, also within three (3) days. If vegetation is not removed, or the culvert/bridge is not protected, within three (3) days, an additional survey shall be conducted prior to the start of work.

For migratory birds other than raptors or eagles, areas that are surveyed outside the primary nesting season (before April 1or after September 1), and do not contain active nests, will be considered cleared for removal through the end of the current construction season, not including the primary nesting season. For example: if an area is surveyed and considered clear in March, it will be considered clear until April 1. If an area is surveyed and found clear in October, it will be considered clear until the following April 1. While the majority of birds do breed during the primary nesting season in Nebraska, others may breed outside of this general timeframe. After an area is determined to be devoid of active nests between September 1 and April 1, personnel should be cognizant to the potential for active nests to occur.

Bald eagles may exhibit breeding behavior and begin to construct or add to existing nests as early as December. Between February 15 and March 30[1], NDOT personnel should observe the construction area for potential raptor nesting. NDOT's Bald Eagle Survey Protocol is included in the Appendix.

Construction projects which include culverts/bridges that do not have netting in place will need to be maintained by the contractor at least twice weekly, between April 1 and September 1, with no longer than three days between inspections. This maintenance should include inspections of the structures for nesting attempts and removal of those nesting attempts. During the inspections any nesting attempts should be removed, unless eggs or young are present, and documented on a survey report form.

Construction projects that have netting in place on the culverts/bridges will have at least twice weekly inspections, with no longer than three days between inspections, and maintenance performed. This monitoring will ensure that the netting is properly maintained, no gaps or holes have formed, and that the nets are functioning properly. Monitoring will also include removing all nesting attempts and releasing any entrapped birds. If a bird is found to be entrapped in the net it should be immediately freed. If the bird is injured and cannot leave the net, the contractor will immediately notify the PM, who will notify the Environmental Section for direction on removal. If a dead bird is found in the net, the inspector may remove the bird and will deliver it to the PM, who will report it to the Environmental Section. The Environmental Section will notify FWS OLE of the incidental take. Monitoring reports will be included in the Environmental Section project file, if performed by WS, or in the contractors'/PM's file on the project site. Reporting style will follow the survey report format. Netting shall be installed in accordance with the Bird Exclusion Netting guidelines found in the Appendix. (See Appendix A & B)

[1] Per the Nebraska Breeding Bird Atlas – the earliest nest building activity noted by ANY raptor species was 7 March. The book did cite that in North Dakota, Bald Eagles were observed nesting, with eggs laid 19 February. The Atlas does not state any earlier nesting date for any raptor species. Birds of Nebraska site the earliest nesting raptor as a Great Horned Owl nesting with eggs laid mid-February.

VIII. AVIAN SURVEY

Examples of Equipment/Resources Used:

Field binoculars
Large mirror on extendable pole
Birds of Nebraska Field Guide, Stan Tekiela
Birds of Eastern and Central North America, Peterson Field Guides
Field Guide to the Birds of North America, National Geographic
Nests, Eggs and Nestlings of North American Birds, P. Baicich, C. J. O. Harrison, Princeton Field Guides
Guide to Bird Behavior Volume Three, D. and L. Stokes
The Nebraska Breeding Bird Atlas 1984-1989, W. Mollhoff
Birds of Nebraska, Their Distribution and Temporal Occurrence, R. Sharpe, W. Silcock, J. Jorgensen
Birds of My Region, Thayer Birding Software – Cornell Lab of Ornithology
Birding by Ear /Eastern and Central North America, Peterson Field Guides R. Walton and R. Lawson
More Birding by Ear/Eastern and Central North America, Peterson Field Guides R. Walton and R. Lawson

Methods Employed:

Trees/Brush

- Individual trees designated for clearing are inspected individually.
- Groups of trees less than 0.25 acre are inspected individually.
- Groups of trees greater than 0.25 acre or 10 yards wide are inspected by walking parallel transects, approximately 10 – 12 yards apart.
- Linear formations of trees are inspected by walking the length of the area
- Brush/shrub areas are surveyed by walking through the area, looking at the brush from all sides since the dense vegetation makes visual observation of nests difficult. Every attempt is made to look at each individual clump of brush.
- Trees and brush are surveyed for stick, grass, leaf and cavity nests from ground level through canopy. Additional time is taken when tree/brush is leafed out to ensure adequate view of potential nests. Surrounding vegetation, such as grass, are surveyed by walking through the area, looking in the vegetation, to the ground, to attempt to locate any ground nesting species. Particular care is taken to look at clumps of vegetation that may provide a nesting cavity towards the ground. Survey should encompass all areas to be grubbed, as well as a 30 foot buffer to allow for vehicle movement.
- Area is surveyed for any breeding activity, via visual and auditory observation. Birds are observed to discern breeding behavior and to locate the nests or young, if present.
- Nests are identified by observing the incubating adult, if present, and identifying its species. Nests without adult present are identified by shape, composition and location of nest. Cavity nests are identified by adult leaving or entering the cavity. Numbers of eggs or young are counted on nests within reach, either directly or by use of the pole mirror. Species appropriate estimates are given for any nest, appearing to be active based on quality of nesting material, which is not able to have its contents

visualized.

Culverts/Bridges

- Culverts and bridges will be visually inspected for the presence of bird nests. Bridges will be inspected under the girders, around the piers, and under the lip of the deck.
- Culverts and bridges will be observed for at least 15 – 20 minutes to determine bird activity surrounding the nests.
- If possible, direct observation into the nests will confirm nesting activity by the presence of eggs or young. This may be accomplished with the use of a pole mirror from the deck of the bridge.
- Surrounding wetland and grassy vegetation, such as cattails and reeds, will also be surveyed by walking through, if possible, to look for potential nests. Survey should include all areas to be excavated as well as a 30 foot buffer to allow for vehicle movement.

Documentation of surveys

Results of surveys will be recorded and maintained in the Environmental Section project file for five (5) years. Documentation will include:

- Project control number, project number and name
- Project location
- Surveyor name
- Date and time of the survey
- Weather conditions at the time of the survey
- Bird species and breeding behavior observed or heard in the area surveyed
- Location, number and species of active bird nests observed in the project area
- Avoidance measures taken to discourage nesting (i.e. Netting a bridge or culvert, or moving the project within the letting schedule to clear trees outside the primary nesting season)
- Circumstances necessitating the survey (i.e. Project is ahead/behind schedule, project delayed due to late permit acquisition) and description of previous surveys or monitoring

  (i.e. Project manager has been monitoring the nesting progression of the last swallow nest in the culvert for two weeks prior to survey)
- Recommended actions

IX. ACTIVE NEST PROCEDURES

If an active nest is found during the survey, the contractor should do everything possible to restructure his activities and leave the nest undisturbed until the young fledge. Fledging could occur within a week, or up to a month after the survey depending on the species of bird and whether the nest contained eggs or young. Also, a buffer of up to 30 feet or more, depending on the species of bird and their sensitivity to disturbance, surrounding the nest could be required until fledging. Buffers of differing widths for a number of bird species, particularly raptors, have been recommended and are outlined in the Raptor Buffer Guidelines for Nebraska (see Appendix E). As recommended in the "National Bald Eagle Management Guidelines" (FWS, May 2007), a buffer of up to 660 feet could be required for active Bald Eagle nests.

If construction cannot be rescheduled to allow the birds to fledge and a protective buffer is not practicable and it is determined to be an unavoidable "take" circumstance, the NDOT Environmental Section and WS will document when the project let, when construction began, and any circumstances that may have caused the project to be delayed. All efforts made by NDOT and the contractor to avoid taking migratory birds or nests, and impacts to NDOT, the contractor and the traveling public if the project is delayed to allow fledging of the young will be documented and provided to FWS OLE. FWS OLE will coordinate with NEFO, for review and recommendation as to whether the project should continue and what options are recommended for relocation, rehabilitation, or a potential take of the nest or birds. If the project cannot be put on hold, a determination if "taking" the nest/young will be prosecuted under the MBTA will be made by FWS OLE. If FWS OLE exercises law enforcement discretion, and does not refer the information regarding the take to the US Attorney's Office for possible prosecution, then either WS, NDOT Environmental Section, or the PM will coordinate with FWS OLE and NEFO to insure that the nest is properly relocated or removed and nest contents humanely dispose of. NDOT and/or WS will document its destruction forward that documentation to FWS OLE for their records. Where unavoidable take of raptor nests is likely to occur, NDOT, WS and FWS should work with Raptor Recovery Nebraska to rescue and potentially raise the young or eggs for release.

It is the contractors' responsibility to schedule his work to accommodate the process of conducting a survey(s) and submitting the necessary documentation if avoidance is not practicable. The contractor shall be responsible for using any legal and practical method to prevent the nesting of birds in order to preclude the need for initial or additional migratory bird nesting surveys. It is understood and agreed that the contractor has considered in the bid all of the pertinent requirements concerning migratory birds (including endangered species) and that no additional compensation, other than time extensions if warranted, will be allowed for any delays or inconvenience resulting in these requirements.

The MBTA prohibits the taking, killing, possession, and transportation, (among other actions) of migratory birds, their eggs, parts, and nests, except when specifically permitted by regulations.

While the Act has no provision for allowing unauthorized take, the FWS realizes that some birds may be killed by the construction activities associated with road construction projects in Nebraska, even if all known reasonable and effective measures to protect birds are used. The FWS OLE carries out its mission to protect migratory birds through investigations and enforcement, as well as by fostering relationships with individuals, companies, and industries that have taken effective steps to avoid take of migratory birds, and by encouraging others to implement measures to avoid take of migratory birds. It is not possible to absolve individuals, companies, or agencies from liability even if they implement bird mortality avoidance or other similar protective measures. However, the FWS OLE focuses its resources on investigating and prosecuting individuals and companies that take migratory birds without identifying and implementing all reasonable, prudent and effective measures to avoid that take. Companies are encouraged to work closely with FWS biologists to identify available protective measures when developing project plans and/or avian protection plans, and to implement those measures prior to/during construction or similar activities.

X. OTHER SPECIAL ACTIVITIES

Borrow Site Excavation

Construction contractors will, at times, require additional fill material to construct a road base or other activities. This extra fill is obtained from a borrow site. Often, bank swallows, Northern rough-winged swallows, barn owl and belted kingfisher will nest in the borrow sites because their sheer, vertical faces provide excellent burrowing sites for their nesting cavities. To prevent these birds from nesting in any borrow sites, the contractor can grade the faces at an angle not suitable for nesting.

If a contractor wishes to use a borrow site that either has been known to previously have nesting birds or may currently have these birds nesting on site; (s)he has two options:

- Follow the protocol for obtaining a nesting survey, and use a different portion of the site until the birds fledge, if active nests are found, or
- Apply netting over the sheer faces of the site or grade off the faces prior to the nesting season.

Threatened or Endangered Species

Construction activities occasionally occur within known T/E nesting locations or migration corridors throughout Nebraska. NDOT reviews these projects and locations, consults with the appropriate agencies (FWS or NGPC depending on the species federal or state listed status) and conducts the agreed-upon conservation measures (usually to include migration or nesting surveys during construction). Currently, NDOT conducts surveys for the piping plover and Interior least tern, and for the whooping crane. If tern or plover nesting activity or an active nest is found, or roosting or feeding whooping cranes are observed construction must stop and the PM will immediately notify the Environmental Section for direction. The same procedure is followed for roosting or feeding whooping cranes. NDOT follows a specific protocol, approved by FWS and NGPC for conducting surveys and documenting reporting, for each T/E species. (See attached species information sheets, Appendix D)

Raptors, including Bald and Golden Eagles

As stated in the BGEPA, active and/or inactive eagle nests are protected and cannot be removed. The Service's nest destruction policy allows for take and destruction (but not possession) of inactive nests for all species except bald and golden eagles and threatened and endangered species. NDOT Environmental Section reviews projects, utilizing the NGPC Bald Eagle survey protocol (found in the Appendix), to determine if nests are within 0.5 mile of the project limits. If a nest is found within the 0.5 mile distance, NDOT will utilize the Bald Eagle Guidelines and Conservation Measures" found at https://www.fws.gov/midwest/eagle/conservation/baea-moreconserve.html to determine if a buffer is recommended for the construction activities, as well as the recommended buffer width. Documentation of adherence to recommended buffers will be maintained in the project file.

Birds of Conservation Concern and Partners in Flight Areas.

Upcoming projects with extensive grading and tree or prairie/wetland vegetation removal are reviewed, and compared to BCC, PIF and NNLP areas. Potential nesting birds are identified by comparing the project location and the typical bird location, and the project is monitored to determine if a special nesting survey is needed. If trees must be cleared during the BCC's

or NNLP's identified species of concern's nesting season, then special attention is directed towards locating those species during the survey. To date, no BCC or NNLP species of concern have been found in NDOT construction project surveys.

XI. AVIAN REPORTING SYSTEM

All avian incidents, such as accidental take or harm of migratory birds, threatened or endangered species, bald or golden eagles, eggs or young of any of these, or any of these causing a threat to human health and safety will be reported to NDOT Environmental Section personnel immediately or within 24 hours following a weekend or holiday. NDOT will coordinate with FWS OLE as appropriate for MBTA, ESA, or BGEPA. FWS OLE will coordinate with NEFO as necessary.

Incidental Take
NDOT and/or contractor personnel discovering the accidental and unintentional damage or destruction of a migratory bird, nest, eggs, or young that results from otherwise lawful activities, are required to notify the Environmental Section. The Environmental Section will fill out the appropriate form and notify FWS OLE who will investigate and coordinate with NDOT.

Emergency Take
For the purpose of this document, NDOT defines an emergency as a bridge failure, flooding event, human injury, etc. NDOT defines a safety emergency as a situation that necessitates immediate action to alleviate a threat of bodily harm to humans, avian species, or both. These definitions are not all-inclusive, and each situation will be determined an emergency on an individual basis.

NDOT and/or contractor personnel encountering an active nest during an emergency situation or with an impending safety emergency will contact NDOT Environmental Section immediately. NDOT Environmental Section will contact FWS OLE as soon as possible to help coordinate efforts to avoid a take and/or to investigate any "take." If possible, the FWS OLE should be notified prior to any "take" to coordinate efforts to relocate, rehabilitate or oversee any "take" in an emergency situation. NDOT and/or contractor personnel may continue working in the work area and proceed with emergency activities as needed. In the event of accidental emergency take, the nest and/or bird is to be left onsite. The Environmental Section is <u>not</u> required to be notified prior to the accidental "take," however after the emergency situation is secured, the Environmental Section shall be notified. The Environmental Section will fill out the appropriate form, and forward to FWS OLE.

XII. RECORD KEEPING

The NDOT Environmental Section will maintain a copy of all surveys and other correspondence related to migratory birds or T/E species. These records will be kept in the project's file located in the Environmental Section, and will be available until the construction project is closed out. Survey and take records are maintained electronically in a database for five years after project completion.

XIII. TRAINING

NDOT Environmental Section personnel will provide training to appropriate agency personnel and contractors to implement the NDOT Avian Protection Plan (APP), avian protection laws, liability issues, and avian species identification as warranted. PMs and other NDOT District personnel are reminded of NDOT's migratory bird policy and procedures and are given any new developments at their annual PM Conference.

XIV. KEY RESOURCES

Nebraska Department of Transportation
1500 Highway 2, PO Box 94759
Lincoln, NE 68509-4759

- Environmental Section (402) 479-4418

USFWS Law Enforcement Officer
1730 West 23rd Street
Fremont, NE 68025

- Jeremy Ten Kley, Special Agent (402) 727-4413
  E-mail: jeremy_tenkley@fws.gov

USFWS Nebraska Ecological Services
9325 B South Alda Road
Wood River, NE 68883 (308) 382-6468
extentions 16 (Brooke Stansberry) 204 (Eliza Hines)

- Email: Brooke_Stansberry@fws.gov, eliza_hines@fws.gov

Nebraska Game & Parks Commission
2200 North 33rd Street
Lincoln, NE 68503

- Joel Jorgensen, Non-game Bird Program Manager (402) 471-5440
  E-mail: joel.jorgensen@nebraska.gov

Raptor Recovery Nebraska

- Fontenelle Forest (402) 731-3140
- http://www.fontenelleforest.org/raptor-recovery

XV. APPENDIX

A. Migratory Bird Nesting Survey Report Form
B. Migratory Bird/Egg Take Form
C. Survey Timeline
D. Endangered and Threatened Bird Species
E. General Guidelines for Raptor Protection
F. Bald Eagle Survey Protocol
G. Nebraska Transportation Habitat Assessment Protocol for Golden Eagle
H. Special Prosecution and Progress for Migratory Birds
I. Special Plan for Bird Exclusion netting

Updated 4/2/2018

NEBRASKA
Good Life. Great Journey.
DEPARTMENT OF TRANSPORTATION

Migratory Bird Nesting Survey Report Form

Project Name:		Highway No.:
Project No.:		Control No.:
GPS Coordinates or corresponding mile marker:	Survey Date and Time:	Biologist:

Conditions:

Temperature: Cloud cover: Wind direction/speed: Precipitation:

Survey Description (area location and size, composition of area, needs, purpose):

Were there active nests within the area surveyed? ☐ Yes No

If yes, list each occurrence separately and record activity:

Were there birds exhibiting nesting behavior? ☐ Yes No

If so, list the species and behavior observed:

Is there a need for future surveys? ☐ Yes No

If so, list the time of next survey or frequency of surveys:

Additional Comments?

Updated 4/2/2018

NEBRASKA
Good Life. Great Journey.
DEPARTMENT OF TRANSPORTATION

Migratory Bird/Egg Take Report Form

Project Name:		Highway No.:
Finder's name and phone number:		Control No.:
GPS Coordinates:	Discovery Date and Time:	Project No.:

Total number and species of:

Dead birds: Active nest/eggs:

Active nest/young: Live/Injured bird:

Location of take (area location and size, composition of area, reference post or station):

Was the area previously surveyed for nesting activity? ☐ Yes No

If yes, list each occurrence separately and record activity:

Do you know the cause of the mortality? ☐ Yes No

If so, list the cause, or describe the probable cause of mortality:

Disposition of the bird/nest:

Humanely euthanized:

Buried: Bagged and discarded:

Other:

Additional Comments?

Reporter's name:

Reporter's signature: _____

Reporter's phone number:

Date sent to USFWS:

Survey Timeline

Activity	Jan	Feb	Mar	Apr	May	June	July	Aug	Sept	Oct	Nov	Dec
Before Clearing and Grubbing:												
Nesting Survey Required												
Biologist Must Survey												
After Biologist Surveyed during nesting season:												
PM Can Survey*												
After PM Survey - May Clear/Grub without additional survey												
Eagle Nesting Survey:												
Nesting Survey Required												
Winter Roosting Survey Required												
For bridge/culverts starting work:												
WS Apply Netting												
Contractor Apply Netting												

Whooping Crane Fact Sheet

Updated 12/1/2016

Whooping Cranes in Flight

Foraging Whooping Cranes

Adult with juvenile

The Whooping Crane (*Grus americana*) is a federal and state listed endangered migratory species. The Whooping Crane was federally listed as endangered in 1967. Major river systems used by whooping cranes in Nebraska include the Platte, Loup, Republican, and Niobrara rivers. Additionally, a 3-mile-wide, 56-mile-long reach of the Platte River between Lexington and Denman, Nebraska, has been federally designated as critical habitat for whooping cranes. (Information from U.S. Fish and Wildlife Service)

Whooping Crane (*Grus americana*)
Order: *Gruiformes*
Family: *Gruidae*
Status: State and Federally Endangered. **Description:** L 52"(132 cm) W 87"(221 cm). Sexes similar but males are larger. White body with red and black facial markings. Yellow bill and long dark legs. Immature is white with tawny head and neck, and reddish-brown mottling on rest of body. **Habitat:** In Nebraska is found along the Platte Valley, with its wide slow moving river and associated sandbars and islands. Nearby wet meadows, croplands, and marshlands are important for foraging. **Status/Range:** Occasional spring and fall migrant along Platte Valley. 90% of sightings within 30 miles of Platte River, and 80% occurred between Lexington and Grand Island. **Call:** Shrill "*ker-loo-ker-lee-loo"* trumpet. **Comments:** Endangered. Management and protection programs slowly succeeding.

Similar: Sandhill Crane, Snow Geese, and especially American White Pelicans in flight: (Information from Nebraska Game and Parks Commission website)

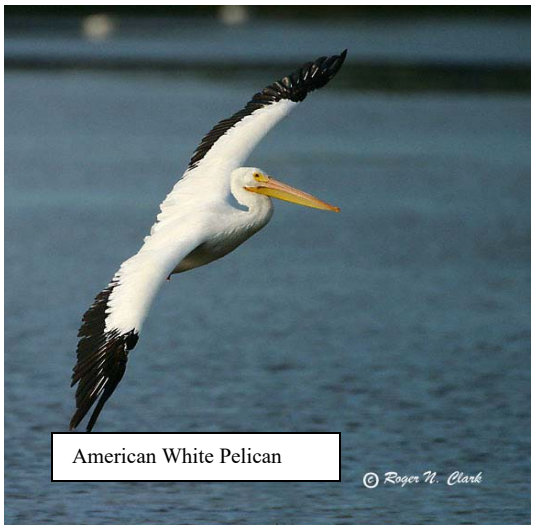

American White Pelican

The Whooping Crane is one of the rarest birds in North America and also one of the largest. Whooping cranes are vulnerable to accidents during migration. Each spring they travel north from their wintering grounds around Aransas National Wildlife Refuge in Texas to their breeding grounds in Wood Buffalo National Park in central Canada (2,400 miles). Each fall this route is reversed. Their journey traverses eastern Montana, North Dakota, South Dakota, Nebraska, Kansas, Oklahoma and Texas. In Nebraska, they stop to rest and feed on the Platte, North and Middle Loup and Niobrara Rivers. (Information taken from the International Recovery Plan, Whooping Crane *Grus americana*; Third revision, 2007).

Updated 12/1/2016

Interior Least Tern & Piping Plover Fact Sheet

Piping plovers (*Charadrius melodus*) and Interior Least Terns (*Sterna antillarum*) are small water birds that nest on a sandy-gravelly substrate. Their natural nesting habitat in Nebraska is high, dry, barren mid-stream sandbars within rivers. Terns and plovers also nest on artificial substrate, mainly sand spoils produced as a byproduct of sand and gravel mining.

Piping Plover (*Charadrius melodus*)

Order: *Charadriiformes*
Family: *Charadriiae*
Status: State and Federally Threatened

Foraging Piping Plover

Piping Plover on Nest

Piping Plover Chick

The Piping Plover was listed in the Federal Register on December 11, 1985, as Endangered. It has since been de-listed to Threatened in Nebraska (Information from U.S. Fish and Wildlife Service)

Description: L 7 1/4"(18 cm). Sexes similar. Very pale above, white below. In breeding plumage has single complete black breast band. Sometimes the breast band can be incomplete, especially in females and juveniles. White forehead and small black cap. Legs are orange. Bill is yellow with black tip.

Habitat: Sparsely vegetated shorelines of shallow water bodies. Prefer shorelines with bare sand, and sandy or pebbly mud. Plovers generally nest on unvegetated or sparsely vegetated sandbars in river channels.

Status/Range: Occasional to rare spring and fall migrant and rare local summer resident. Have recent breeding records for Platte, Niobrara, Loup, and Middle Loup Rivers and at Lake McConaughy and recently at Lake Minatare. **Call:** Clear piping "*peep-lo*." **Comments:** Surveys in 1996 indicate that nearly 300 pairs of Piping Plovers bred in the state. (Information provided from Nebraska Game and Parks Commission website)

Courtship Behaviors: Males perform courtship flights over breeding territory, with slow wing beats and piping call note. On the ground, male approaches female, stands upright with neck stretched, and rapidly stamps feet with odd high-stepping gait.

Nest/Nesting Behavior: Nest site is on open ground some distances from the water, often with large rock or clump of grass nearby, but no direct shelter or shade. May nest very close to tern breeding colonies. Nest is a shallow scrape in the sand, sometimes lined with shells and pebbles. May make several scrapes before actual nesting. Piping plovers lay 4 eggs that take about 25-30 days to hatch. Soon after hatching the chicks leave the nest and are able to feed themselves (worms, flies, and other invertebrates along the shoreline). **Chicks are very mobile within about 3-5 days**. In approximately another 20-25 days, they are able to fly and may feed at the site for another week or two. *(Information from Renae Held, UNL Tern & Plover Conservation Partnership Program Coordinator and Troy Peterson Field Guides).*

Similar Species: Killdeer, Semipalmated plover

Killdeer is 9 - 11"

Semipalmated plover

Interior Least Tern (*Sterna antillarum*)

Order: *Charadriiformes*
Family: *Laridae*
Status: State and Federally Endangered

Foraging Least Tern

Least Tern with nestling

Least Tern on Nest

The Interior Least Tern was listed in the Federal Register as Endangered on May 28, 1985 (Information from U.S. Fish and Wildlife Service)

Description: L 9" (23 cm) W 20" (51 cm). Sexes similar. Breeding adults show distinctive white forehead against black cap and nape; gray above and white below; orange-yellow bill with dark tip; orange-yellow legs. Conspicuous black wedge on outer primaries is visible in flight. Short deeply forked tail. Non-breeding birds lack black cap, instead having a dark eye stripe. Juvenile birds are mottled gray-brown above and white below. **The Interior Least Tern is the smallest of all the terns**.

Habitat: Migrants can be found on lakes, rivers, and reservoirs. Nesting is done mainly on river sand bars or islands, but sometimes also on barren shorelines, gravel beaches, or newly cleared land.

Status/Range: Uncommon spring and fall migrant in eastern part of the state. Highly local summer resident in Platte and Niobrara River valleys. Local breeder. **Call:** Sharp "*kit, kit*", and repetitive "*dee-dee*". (Information from Nebraska Game and Parks Commission website)

Courtship Behaviors: In courtship, male (carrying fish in bill) flies upward, followed by female, then both glide down. On the ground, displays include courtship feeding by male.

Nest/Nesting Behavior: Nest site is on open ground. Nest is shallow scrape, sometimes lined with pebbles, grass, and debris. Least terns lay 3 eggs that hatch in about 22-28 days. The chicks are fed small, whole fish by the adults even after they learn to fly. **In the first few weeks the chicks move very little and tend to stay near the nest. Their defense at this age is to lie down and hide, making them vulnerable to machinery and human traffic or disturbance.**

(Information from Renae Held, UNL Tern & Plover Conservation Partnership Program Coordinator and Troy Peterson Field Guides)

Similar Species: Common Tern or Forster's Tern

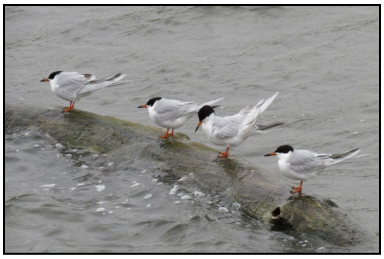

Forster's Tern is 14-15"

Common Tern is 13-16"

Updated 12/1/2016

Mountain Plover Fact Sheet

Adult Mountain Plover

Mountain Plover Eggs

Habitat

Mountain Plover: *Charadrius montanus*
Order: Charadriiformes
Family: Charadriidae
Status: State Threatened

Description: 8 to 9.5 inches (20 to 24 cm) long and weighs about 3.7 ounces (105 grams). The head, back, wings and portions of the upper breast are a pale, sandy brown. The neck and underparts are white. The crown is capped with black, and a black stripe extends from the base of the beak to the eye. The dark bands contrast sharply with the brilliant white forehead and throat. The bill is black and the legs are fairly long and pale brown or brownish-yellow. There is not band across the breast.

Habitat: A disturbed-prairie or a semi-desert species. Preferred nesting sites include expansive, arid flats with very short grass and a high proportion of bare ground. In parts of its breeding range the mountain plover selectively nests in prairie dog towns.

Status/Range: Breeding strongholds are confined to small areas of native prairie in Montana and Colorado. Most of the birds winter in California, principally in the San Joaquin Valley, an area experiencing high rates of human population growth.

Most recent sightings are of adults in Kimball and Box Butte counties, but there are two accounts of breeding, one of adults with young and one of an adult on a nest. The limited information available suggests the mountain plover occurs rarely and locally in the state. It was listed as threatened in Nebraska in 1976.

Call: Their call during pre-nesting and early nesting is a series of "wee-wee-wee" sounds begins at the apex of the flight and continues until the bird reaches the ground. The birds also have several other vocalizations, including a “clicking” alert call and a group “chatter” call.

Similar Species: Killdeer and American Golden Plover
(Information from Nebraska Game and Parks Commission website)

General Guidelines for Raptor Protection from Human and Land Use Disturbances in Nebraska
(DRAFT)

TABLE 1. RECOMMENDED BUFFERS FOR RAPTORS IN NEBRASKA

SPECIES	Spatial Buffer (miles)	Seasonal Buffer	Incubation # Days	Brooding # Days Post-Hatch	Fledging # Days Post-Hatch	Post-fledge Dependency to Nest, # Days[1]
Bald eagle	1.0	1/1-8/31	34-36	21-28	70-80	14-20
Golden eagle	0.5	1/1-8/31	43-45	30-40	66-75	14-20
Northern Goshawk	0.5	3/1-8/15	36-38	20-22	34-41	20-22
Northern Harrier	0.5	4/1-8/15	32-38	21-28	42	7
Cooper's hawk	0.5	3/15-8/31	32-36	14	27-34	10
Ferruginous hawk	0.5	3/1-8/1	32-33	21	38-48	7-10
Red-tailed hawk	0.5	3/15-8/15	30-35	35	45-46	14-18
Sharp-shinned hawk	0.5	3/15-8/31	32-35	15	24-27	12-16
Swainson's hawk	0.5	3/1-8/31	33-36	20	36-40	14
Turkey vulture	0.5	5/1-8/15	38-41	14	63-88	10-12
Peregrine falcon	1.0	2/1-8/31	33-35	14-21	35-49	21
Prairie falcon	0.25	4/1-8/31	29-33	28	35-42	7-14
Merlin	0.5	4/1-8/31	28-32	7	30-35	7-19
American kestrel	0.125	4/1-8/15	26-32	8-10	27-30	12
Osprey	0.5	4/1-8/31	37-38	30-35	48-59	45-50
Burrowing owl	0.25	3/1-8/31	27-30	20-22	40-45	21-28
Great horned owl	0.25	12/1-9/31	30-35	21-28	40-50	7-14
Long-eared owl	0.25	2/1-8/15	26-28	20-26	30-40	7-14
Northern saw-whet owl	0.25	3/1-8/31	26-28	20-22	27-34	7-14
Short-eared owl	0.25	3/1-8/1	24-29	12-18	24-27	7-14
Western Screech owl	0.25	3/1-8/15	21-30	10-14	30-32	7-14
Common Barn-owl	0.125	2/1-9/15	30-34	20-22	56-62	7-14

[1] Length of post-fledge dependency period to parents is longer than reported in this table. Reported dependency periods reflect the amount of time the young are still dependent on the nest site; i.e., they return to the nest for feeding.

Bald Eagle Survey Protocol
Nebraska Game and Parks Commission

Background

Bald eagles *(Haliaeetus leucocephalus)* utilize the mature, forested areas along the major river systems in Nebraska. Eagles are present throughout the year in Nebraska as they both breed and winter in Nebraska. Nest building activity may begin as early as December. Nests are typically built near rivers, lakes and reservoirs and in Nebraska are most often in large cottonwood trees, although bald eagles use other types of trees nationwide. The nests are constructed with large sticks and lined with leaves and grasses. A breeding pair will often return to the same nest and add new material each year. Nests can become 8 feet across and 12 feet deep. Nesting activities begin with egg laying which occurs as early as February. Fledging takes place when the young are approximately 10 – 11 weeks old, however the young remain near the nest and are dependent on the adults for food for at least another 6 weeks. In Nebraska,the nesting season continues through August.

The bald eagle southward migration begins as early as October and the wintering period extends from December through March. Breeding pairs may stay at their nest site -year round if food is available. Eagles are often most numerous from late February through early March," when wintering numbers are supplemented by migrants that wintered further south. All migrants that breed elsewhere typically leave by late March. Wintering eagle numbers fluctuate from year to year, but birds typically concentrate in areas with large open water where food is available and form winter roosts. In Nebraska, there are often few locations that provide adequate resources for eagles during the winter. Protection of these areas is important, as relocation during the winter may impact survival. Roosts may be in deciduous or coniferous trees, but in Nebraska, most are in cottonwood trees. Eagles may establish winter roosts miles from the foraging areas (Keister et al. 1985). Winter roosting may assist with finding resources (Knight and Knight 1983) and pair bond formation. In Nebraska, some communal roost sites can have as many as 100 eagles (Nebraska Game and Parks Commission 1993).

Purpose

Eagle surveys are designed to ensure awareness and resolution to any potential conflicts between bald eagle and potentially disruptive human activities. To document the presence or absence of bald eagles and their activities, two types of surveys are recommended: nest surveys and winter roost surveys. These should be considered when a disturbance will occur within 0.5 miles of areas of suitable habitat for bald eagles.

Nest Surveys

Bald eagle nests are usually conspicuous and distinctive, but it must be stressed that nests can be well concealed and very difficult to see, particularly when trees have foliage. Nest surveys should complete a full inspection of potential trees for bald eagle nests within 0.5 miles of the project in areas considered suitable habitat. Transects should be recorded using GPS. In addition to nests, any bald eagles observed during the survey and their behavior should be noted. Potential nests should be observed from a distant location that does not disturb the eagles to confirm the presence or absence of eagles. Nest surveys are to be conducted by a qualified

biologist. Results of surveys and transect locations should be sent to the Nebraska Game and Parks Commission and US Fish and Wildlife Service.

If construction will begin between February 1 and April 15, a nest survey must be completed at least 1 but not more than 14 days prior to construction. If construction will begin between April 15 and October 1, a nest survey completed in March is sufficient, as nests will likely already be constructed if nesting will occur that year. However a nest survey may be completed anytime during this timeframe, as long as it is completed prior to construction. If bald eagles are nesting in the area, consultation with NGPC and USFWS will be required, so it is in the project proponent's best interest to complete the survey and notify the agencies as early as possible.

(See timing diagram 3)

Winter Roost Surveys:

For the purposes of avoiding adverse impacts to wintering bald eagles, two types of roosts are defined. *Transitory roosts* are defined as 3 or more eagles, within 100 meters of each other, for at least 2 nights in an area with no previous knowledge of winter communal roosting. *Communal roosts* are defined as 6 or more eagles in a small area for extended periods of time or used for multiple years. Communal roosts in Nebraska are monitored, so typically their existence will be known and conservation measures established prior to construction.

If construction will be occurring in an area near suitable habitat (near open water with large trees present) where there is no prior knowledge of a communal roost site and construction will be occurring between October 1 and January 31 winter roost surveys are necessary. Winter roost surveys should begin at least 1 day prior to the first date of construction. Winter roost surveys should be conducted daily at dawn as the eagles are likely to leave the roost to forage within the first hour of daylight (depending on weather conditions). These surveys need only be conducted in the area of active construction, not the entire project area. Surveys may be completed by a trained individual using appropriate binoculars or spotting scope. Survey reports should be submitted weekly to the Nebraska Game and Parks Commission and US Fish and Wildlife Service. Evidence of a roost should be reported immediately.

Please note, eagles seen soaring over a construction site should be watched to observe potential nesting or roosting, but construction does not need to terminate due to soaring behavior.

(See timing diagram 3)

References

Buehler, D.A. 2000. Bald Eagle *(Haliaeetus leucocephalus),* In The Birds of North America, No. 506 (A. Poole and F. Gill, eds.). The Birds of North America, Inc., Philadelphia, PA.

Keister, G. P., Jr., R. G. Anthony and H. R. Holbo. A model of energy consumption in bald eagles: An evaluation of night communal roosting. The Wilson Bulletin. 97(2): 148-160

Knight, S. K. and R. L. Night. 1983. Aspects of food finding by wintering bald eagles. The Auk 100: 477-484.

Nebraska Game and Parks Commission. 1993. Nebraska's threatened and endangered species: Bald eagle. Nebraska Game and Parks Commission, Lincoln, Nebraska.

Bald Eagle Survey Recommendations
Timing Diagram
Standard Protocol prepared by NE Game and Parks Commission
January-07

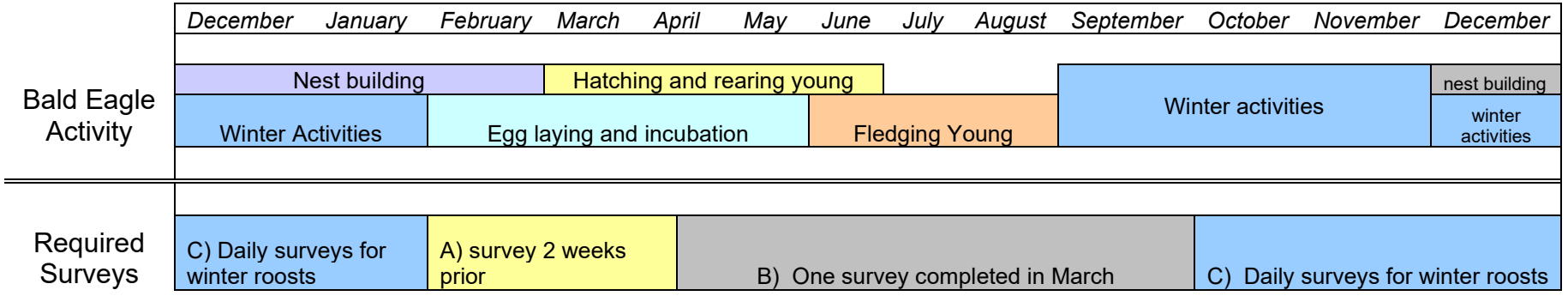

A) Projects starting between February 1 to April 15 must have a nest survey completed 1-14 days prior to the start of construction
B) Projects starting between April 15 to October 1 need a nest survey completed as early as March, or before project begins
C) Projects starting between October 1 and December need daily winter roost surveys completed

NOTE: Surveys are only necessary in areas where the disturbance is near suitable eagle habitat

Timing of eagle activity references:

Draft National Bald Eagle Management Guidelines, US Fish and Wildlife Service, 2006,

Buehler, D.A. 2000. Bald Eagle (*Haliaeetus leucocephalus*), In The Birds of North America, No. 506 (A. Poole and F. Gill, eds.). The Birds of North America, Inc., Philadelphia, PA.

Nebraska Game and Parks Commission. 1993. Nebraska's threatened and endangered species: Bald eagle. Nebraska Game and Parks Commission, Lincoln, Nebraska.

Nebraska Transportation Habitat Assessment Protocol for Golden Eagle

Background

Golden eagles (*Aquila chrysaetos*) can be found in the tundra, throughout grasslands, woodland-brushlands, and forested habitat, south to arid deserts, including Death Valley, California (Kochert et al., 2002). They are aerial predators and eat small to mid-sized reptiles, birds, and mammals up to the size of mule deer fawns and coyote pups. They also are known to scavenge and utilize carrion. In Nebraska's Panhandle, golden eagles are found in arid open country with grassland for foraging, which covers approximately the western quarter of the state. These habitats are typically near buttes or canyons which serve as nesting sites. Golden eagle food sources often consist of prairie dogs and jackrabbits; however, eagles are opportunistic scavengers and will occasionally feed on any available animal carcass. Golden eagles are a regular spring and fall migrant and winter visitor in central Nebraska, but they are not commonly observed in the eastern third of the state.

Golden eagles build nests on cliffs, in the largest trees of forested stands, or on rock escarpments, allowing for an unobstructed view of the surrounding habitat (Beecham and Kochert 1975, Menkens and Anderson 1987, Bates and Moretti, 1994). Usually, sticks and soft material are added to existing nests, or new nests are constructed to create a strong, flat or bowl shaped platform for nesting (Palmer 1988, Watson 1997, Kochert et al., 2002). Golden eagles have been known to decorate multiple nests in a single year; continuing to do so until they lay eggs in a selected nest. The completed nest structure(s) can vary from large and multi-layered; or a small augmentation of sticks in caves with little material other than extant detritus (Ellis et al., 2009).

Golden eagles avoid nesting near urban areas and do not generally nest in densely forested habitat. Individuals will occasionally nest near semi-urban areas where housing density is low or in farmland habitat; however golden eagles have been noted to be sensitive to some forms of human presence (Pagel et al., 2010). Golden Eagles lay one to four eggs, with two eggs being common and four eggs being rare. The laying interval between eggs ranges between three to five days. Severe weather may delay the onset of egg-laying (Driscoll, 2010).

Phenology is not well understood in Nebraska; however nesting birds have been observed on eggs in April and young birds reported by the third week of May (Molhoff, 2001). The golden eagle breeding season generally occurs from mid-January to mid-September, but varies according to geographic area (Phillips et al., 1990, Verner et al., 1980).

Driscoll (2010) describes that breeding chronology begins with an increase in courtship flights and nest refurbishment in December and January. Some eagle pairs lay eggs as early as January; however, mid-February is more typical. Incubation is 45 days. Young hatch from mid-March through April and remain in the nest for 10 weeks, fledging in June. Fledglings remain in the breeding area for up to two months, during which the adults continue to feed them. Juveniles disperse from the breeding area during July and August.

Purpose

Golden eagles are legally protected by the Bald and Golden Eagle Protection Act, the Migratory Bird Treaty Act and are considered a Tier II at-risk species (i.e., a species that is at-risk in Nebraska but doing well in other parts of its range) by the Nebraska Game and Parks Commission (NGPC) (Schneider et. al., 2011). The Nebraska Department of Transportation (NDOT) and Federal Highway Administration (FHWA) has a need to demonstrate due diligence efforts that the transportation program is trying to avoid potential conflicts between eagles and potentially disruptive construction activities, as is already assessed and completed for bald eagles and migratory birds (Bald eagle survey protocol, 2007, NDOT APP, 2012). To document this effort for golden eagles, a habitat assessment process will be followed and coordinated with the NGPC and the U.S. Fish and Wildlife Service (USFWS).

Habitat Assessment Process

1) Similar to our Species Evaluation Process for listed species, NDOT will determine if a proposed project occurs in a county within the most current available breeding range map (2012 example attached) and if there are known nest observations identified by NGPC's Heritage Program or the Breeding Bird Atlas within a 0.5-mile radius of the project.

2) In addition to range & nest location data, other types of desktop (GIS) information could be analyzed to determine whether the Limits of Construction are within 0.5-mile of the following golden eagle habitat indicators:

- Undeveloped
- Native grassland
- Trees
- Steep terrain
- Biologically Unique Landscapes (Pine Ridge, Wildcat Hills, Panhandle Prairies, Kimball Grasslands, Oglala Grasslands)
- Rocky escarpments
- Cliffs
- Rock outcrop
- Shortgrass prairie
- Sandhills dune prairie with 400 foot high rolling dunes
- Prairie dog towns

(3) If a **known** nest does occur within 0.5-mile of the project, or the habitat within 0.5-mile of the project appears to suggest a strong likelihood for golden eagle occupancy, a planned site visit prior to construction should take place:

It is recommended that the dates of the site visit should be sensitive to the local nesting (i.e. laying, incubating, and brooding) and conducted during weather conditions favorable for observing from medium to long range distances (+300—700 meters) (Pagel et al, 2010).
There is some unknown proportion of golden eagles that nest in trees in the panhandle (<10%) but these nests are not always detected as cliff-dwelling nests are but usually they are found in fairly remote locations (Joel Jorgensen, pers comm). It seems likely that these tree nests should be detected by following the bald eagle nest survey protocol.

(4) If nests are identified, follow up coordination with the Service and Commission should take place.

Nest Surveys

Golden eagle nests are typically large and distinctive, but may be well concealed and difficult to see against cliff faces and within rocky areas, or if in a tree, when trees have foliage. Nest surveys should complete a full inspection of rock escarpments, buttes, cliff faces, and large trees within 0.5-mile of the project in areas considered suitable habitat. Identified nests should be recorded using GPS. In addition to nests, any golden eagles observed during the survey and their behavior should be noted on the survey report. Potential nests should be observed from a distant location that does not disturb the eagles to confirm presence or absence of eagle activity. Nest surveys are to be conducted by a qualified biologist. Surveys resulting in a positive nest location will be sent to the NGPC and USFWS.

If construction will begin between February 1 and April 15, a nest survey must be completed at least 1, but not more than 14 days prior to construction. If construction will begin between April 15 and November 1, a nest survey completed in March is sufficient, as nests will likely already be constructed if nesting will occur that year. However, a nest survey may be completed at any time during this timeframe, as long as it is completed prior to construction. If golden eagles are nesting in the area, consultation with USFWS will be required, so it is in the project proponent's best interest to complete the survey and notify the agencies as early as possible.

Identification resources

The field identification of North American eagles:
http://www.globalraptors.org/grin/researchers/uploads/155/eagle_i.d._1983.pdf

Good examples of differences between species (i.e. feet, bills, feathers and pictures):
http://www.hancockwildlife.org/forum/viewtopic.php?showtopic=132018

References

Bates, J. W., and M. O. Moretti. 1994. Golden Eagle (*Aquila chrysaetos*) population ecology in eastern Utah. Great Basin Naturalist 54:248-255.

Beecham, J.J. and M.N Kochert. 1975. Breeding biology of the golden eagle in southwestern Idaho. Wilson Bull. 87:506-513.

Clark, W.S. 1983. The field identification of North American eagles. American Birds 37: 822-826.

Driscoll, D.E. 2010. Protocol for golden eagle occupancy, reproduction, and prey population assessment. American Eagle Research Institute, Apache Jct., AZ. 55pp.

Ellis, D.H., T.Craig, E. Craig, S. Postupalsky, C.T. Larue, R.W. Nelson, D.W. Anderson, C.J. Henny, J. Watson, B.A. Milsap, J.W. Dawson, K.L. Cole, E.M. Martin, A. Margalida, and P. Kung. 2009. Unusual raptor nests around the world. J. Raptor Res. 43:175-198.

Kochert, M. N., K. Steenhof, C. L. Mcintyre and E. H. Craig. 2002. Golden Eagle (Aquila chrysaetos), The Birds of North America Online (A. Poole, Ed.). Ithaca: Cornell Lab of

Ornithology; Retrieved from the Birds of North America Online: http://bna.birds.cornell.edu/bna/species/684

Menkens, G.E., JR. and S.H. Anderson. 1987. Nest site characteristics of a predominantly tree-nesting population of golden eagles. J. Field Ornithol. 58:22-25.

Molhoff, W. J. 2001. The Nebraska Breeding Bird Atlas 1984-1989. Nebraska Game and Parks Commission, Lincoln, NE.

Pagel, J.E., D.M. Whittington, and G.T. Allen. 2010. Interim Golden Eagle inventory and monitoring protocols; and other recommendations. Division of Migratory Bird Management, U.S. Fish and Wildlife Service.

Palmer, R.S. 1988. Golden eagle. In R.S. Palmer (ed.). Handbook of North American birds. Yale Univ. Press.

Phillips, Robert L., Beske, Alan E. 1990. Distribution and abundance of golden eagles and other raptors in Campbell and Converse Counties, Wyoming. Fish and Wildlife Technical Report 27. Washington, DC: U.S. Department of the Interior, Fish and Wildlife Service. 31 p

Schneider, R., M. Humpert, K. Stoner, G. Steinauer. 2005. The Nebraska Natural Legacy Project: A Comprehensive Wildlife Conservation Strategy. Nebraska Game and Parks Commission, Lincoln, NE.

Verner, Jared, Boss, Allan S., tech. coords. 1980. California wildlife and their habitats: western Sierra Nevada. Gen. Tech. Rep. PSW-37. Berkeley, CA: U.S. Department of Agriculture, Forest Service, Pacific Southwest Forest and Range Experiment Station. 439 p.

Watson, J. 1997. The Golden Eagle. T&AD Poyser, London.

Current breeding range of Golden Eagle
(Aquila chrysaetos)

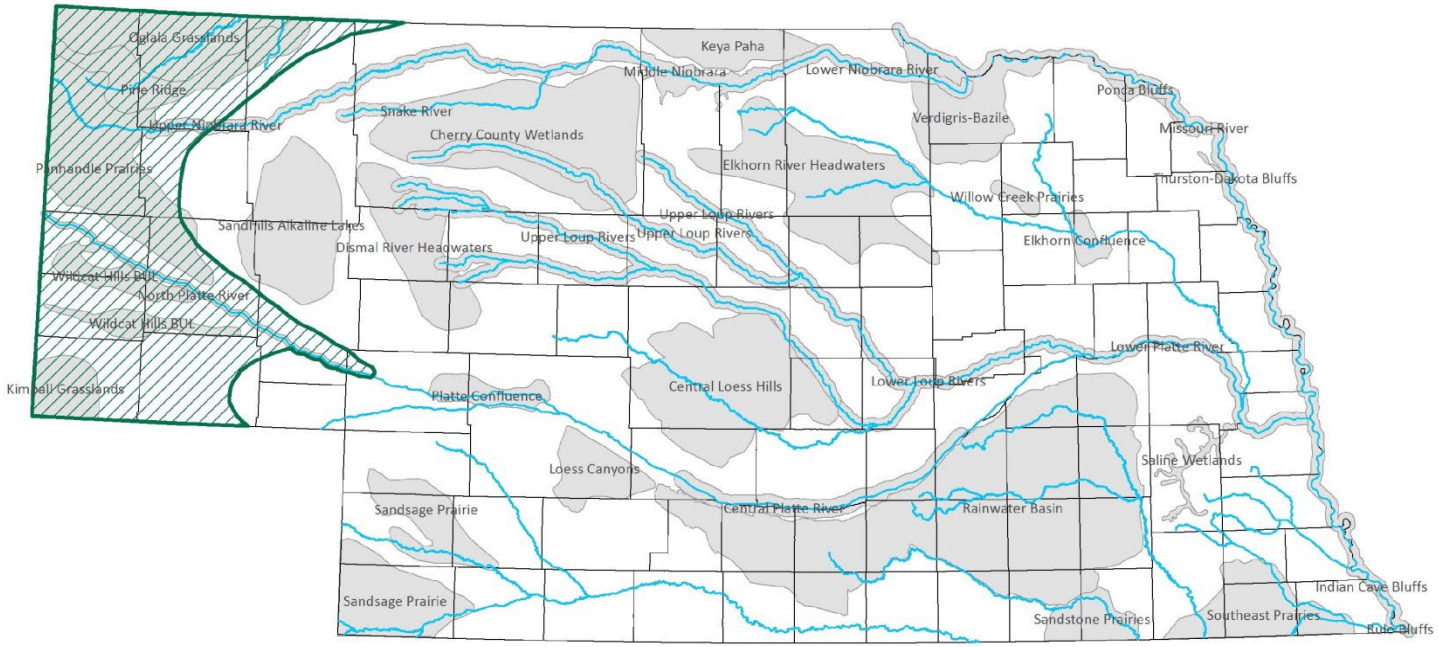

NEBRASKA GAME PARKS

NEBRASKA Natural Heritage Program

Nebraska Natural Heritage Program,
Nebraska Game and Parks Commission
September 2012

Adult Golden Eagle (USFWS)

Immature Bald Eagle (USFWS)

Golden Eagle (USFWS)

Turkey Vulture (USFWS)

SPECIAL PROSECUTION AND PROGRESS
(Migratory Birds)

The Department of Transportation will, to the extent practicable, schedule the letting of projects such that clearing and grubbing can occur outside of the primary nesting season in Nebraska which has been determined to generally occur between April 1 and September 1. Work on structures such as but not limited to bridges and culverts, should occur outside the primary swallow nesting season, April 15 to September 30, unless approved methods of avoiding nesting have been taken on the bridge and/or culvert structures. The nesting dates above are a guide only, nesting can occur outside of those dates. Work outside of those dates is not exempt from compliance with the Migratory Bird Treaty Act.

The Contractor shall, to the extent possible, schedule work on structures, such as but not limited to bridges and culverts, and clearing and grubbing activities to occur outside the primary nesting season in Nebraska. However, if circumstances dictate that project construction or demolition must be done when nesting migratory birds may be present, a survey of the number of active nests and species of birds shall be conducted by qualified personnel representing the Contractor, and assisted by the Project Manager (PM) or NDOT Environmental Section staff. If the survey finds that nests will be impacted by the proposed construction, the Contractor may be responsible for delays.

The following guidance is provided for compliance with the Migratory Bird Treaty Act for construction of NDOT projects:

1. The Contractor shall submit a plan to the NDOT regarding how he intends to accomplish bridge demolition or clearing and grubbing of the project to avoid conflict with nesting migratory birds.

2. The Contractor must submit a temporary erosion control plan tailored to fit the plan for clearing and grubbing.

3. If construction operations result in unavoidable conflict with nesting migratory bird's eggs or young, which will result in "taking" nests and their contents, the Contractor should notify the NDOT Project Manager (PM). The PM shall notify the Environmental Section of Project Development by telephone at 402-479-4418.

4. The NDOT Environmental Section will then determine if assistance in conducting the survey will be provided by the NDOT Environmental Section (if available) and arrange for assistance with the survey of nest numbers, bird species, etc. Results of the survey shall be maintained by the NDOT until project completion.

5. If the nesting survey is required, and the project was awarded prior to the nesting season, and the Contractor did not accomplish clearing/grubbing and/or work on bridge/culvert structures outside the nesting season, the Contractor will reimburse the Department of Transportation for each survey required at $1,000 per survey. If the project was awarded during the nesting season, and construction activities are such that clearing/grubbing and/or work on bridge/culvert structures must be accomplished prior to any other activity on the project, then there will be no charge assessed for the initial survey. The Contractor is responsible for removing all trees surveyed that do not contain active nests, and for taking

appropriate measures on bridge/culvert structures, within 5 days of the survey. Reimbursement for additional surveys may be charged if the Contractor fails to remove the trees within 5 days of the survey, and requires an additional survey. Survey reimbursement will be determined on a project specific basis, considering the project timeline and associated activities.

6. If an active nest is found during the survey, the Contractor should do everything possible to restructure his activities and leave the nest undisturbed until the young fledge. Fledging could occur within a week, or up to a month, after the survey depending on the species of bird and whether the nest contained eggs or young. Also depending on the species of bird and their sensitivity to disturbance, a buffer of up to 30 feet surrounding the tree with the active nest could be required.

7. If construction cannot be rescheduled to allow the birds to fledge, and it is determined as an unavoidable “take” circumstance, the Contractor shall stop all work within 30 feet of the active nest and coordinate with the Construction Project Manager to determine how to proceed. The Construction Project Manager will then coordinate with the NDOT Environmental Section and they will facilitate coordination with the US Fish and Wildlife Service and the Federal Highway Administration (for projects using Federal-aid) to determine the appropriate way to address the active nest. No work shall occur within 30 feet of the active nest until US Fish and Wildlife Service coordination is complete and the requirements of the Migratory Bird Treaty Act are satisfied.

8. It is the Contractors' responsibility to schedule his work to accommodate the process of conducting a survey(s) and submitting the necessary documentation if avoidance is not practicable. The Contractor shall be responsible for using any legal and practical method to prevent the nesting of birds in order to prevent the need for any survey and prevent the need for additional surveys. It is understood and agreed that the Contractor has considered in the bid all of the pertinent requirements concerning migratory birds (including endangered species) and that no additional compensation, other than time extensions if warranted, will be allowed for any delays or inconvenience resulting in these requirements.

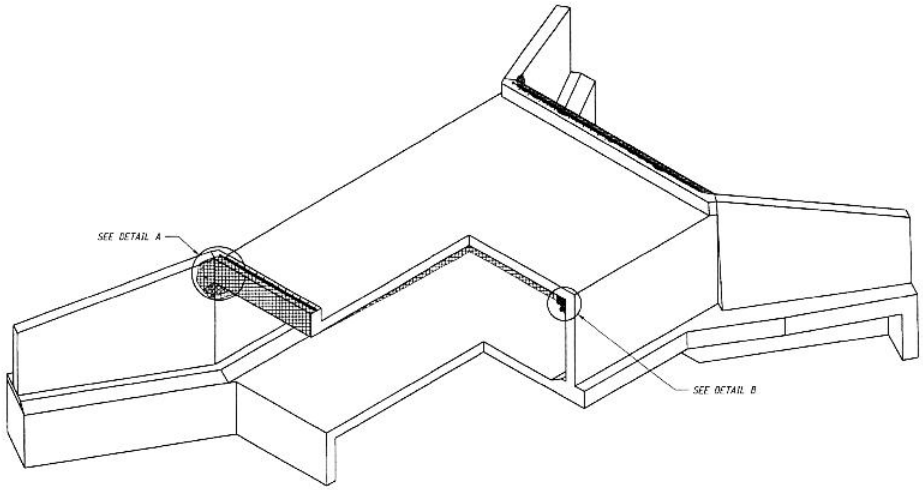

BOX CULVERT

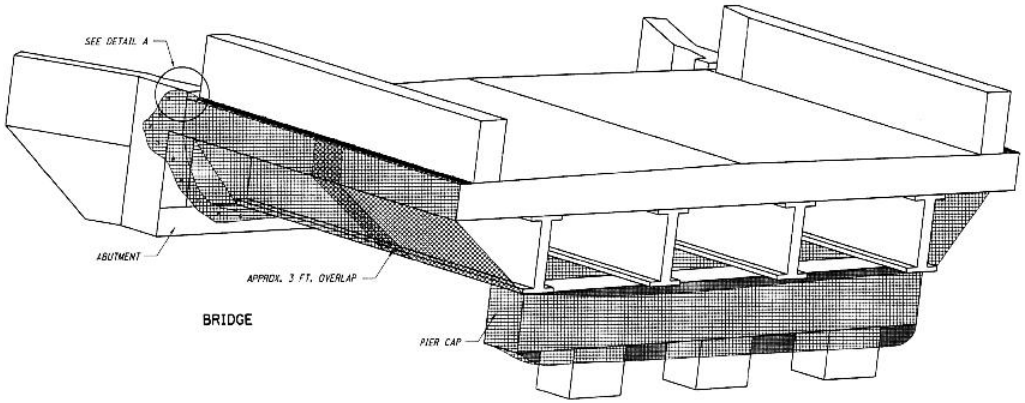

BRIDGE

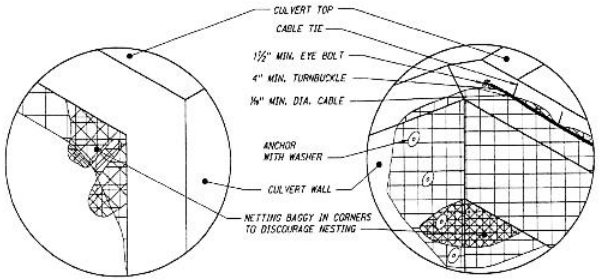

DETAIL B

DETAIL A

NOTES:

MAY BE USED ON OTHER STRUCTURES SUCH AS LARGE CORRUGATED METAL PIPES.

THE CONTRACTOR SHALL USE NETTING CONSISTING OF OPENINGS NO LARGER THAN ½" WIDE. THE NETTING MATERIAL WILL BE CONSTRUCTED OF EXTRUDED POLYPROPYLENE OR NYLON MESH.

THE CONTRACTOR SHALL INSTALL NETTING IN A MANNER THAT GAPS BETWEEN THE NETTING AND THE BRIDGE/CULVERT ARE LESS THAN ½" AT THE POINT OF ATTACHMENT. LOOSE FITTING NETTING IS DESIRABLE FOR STRUCTURES SUCH AS BOX CULVERTS. WHERE NETTING FITTED TIGHT TO THE STRUCTURE MAY ALLOW NESTING.

NETTING SHOULD OVERLAP IN END AREAS OF BRIDGE PIERS BY APPROXIMATELY 3 FT. AND SHOULD EXTEND TO THE BOTTOM OF THE PIER CAP, IF PRESENT. FOR SLAB BRIDGES, NETTING SHOULD BE PULLED TAUT NOT BE TIGHT AGAINST THE STRUCTURE AT INSIDE CORNER AREAS BETWEEN THE UNDERSIDE OF A BRIDGE DECK AND PIER CAP AND MAINTAINED TO MINIMIZE SAGGING.

DEVICES SUCH AS STEEL CABLES AND EYE BOLTS USED TO SECURE NETTING TO THE STRUCTURE SHOULD BE OF ADEQUATE NUMBER AND STRENGTH TO ACCOUNT FOR THE WEIGHT OF THE NET AND SUBSEQUENT STRETCHING, AND SHALL MEET THE SPECIFICATIONS OUTLINED IN SECTION 1057 AND 1062 OF THE STANDARD SPECIFICATION FOR HIGHWAY CONSTRUCTION.

PLASTIC CABLE OR "ZIP" TIES SHOULD BE USED TO SECURE TO THE STEEL CABLES AND TO BUNCH EXCESS NETTING WHERE NEEDED.

STANDARD DIMENSIONAL LUMBER SECURELY ATTACHED TO THE STRUCTURE MAY BE SUBSTITUTED FOR THE CABLE AND EYE BOLT METHOD OF SECURING THE NETTING TO THE STRUCTURE.

THE CONTRACTOR SHALL INSTALL THE NETTING IN A MANNER THAT WILL MINIMIZE THE OBSTRUCTION TO WATERCOURSES DURING PERIODS OF HIGH FLOW BY KEEPING THE NETTING TAUT TO THE TOP OF THE CULVERT.

FURTHER GUIDANCE FOR PLACEMENT IS AVAILABLE FROM THE NDOR ENVIRONMENTAL SECTION IN PLANNING AND PROJECT DEVELOPMENT.

REV. NO.	DATE	DESCRIPTION OF REVISION

NEBRASKA DEPARTMENT OF ROADS

STANDARD PLAN NO. 490

BIRD EXCLUSION NETTING

PROFESSIONAL CIVIL ENGINEER — JAMES J. KNOTT — E-6815 — STATE OF NEBRASKA

FHWA APPROVED:

3/30/2011
DATE

ORIGINAL:
JULY 1, 2011
DATE

1
1

Roadway Design Division

DGN:490BIRD
DGN:1507
18-AUG-2011 14:56

490BIRD03.dgn
1001